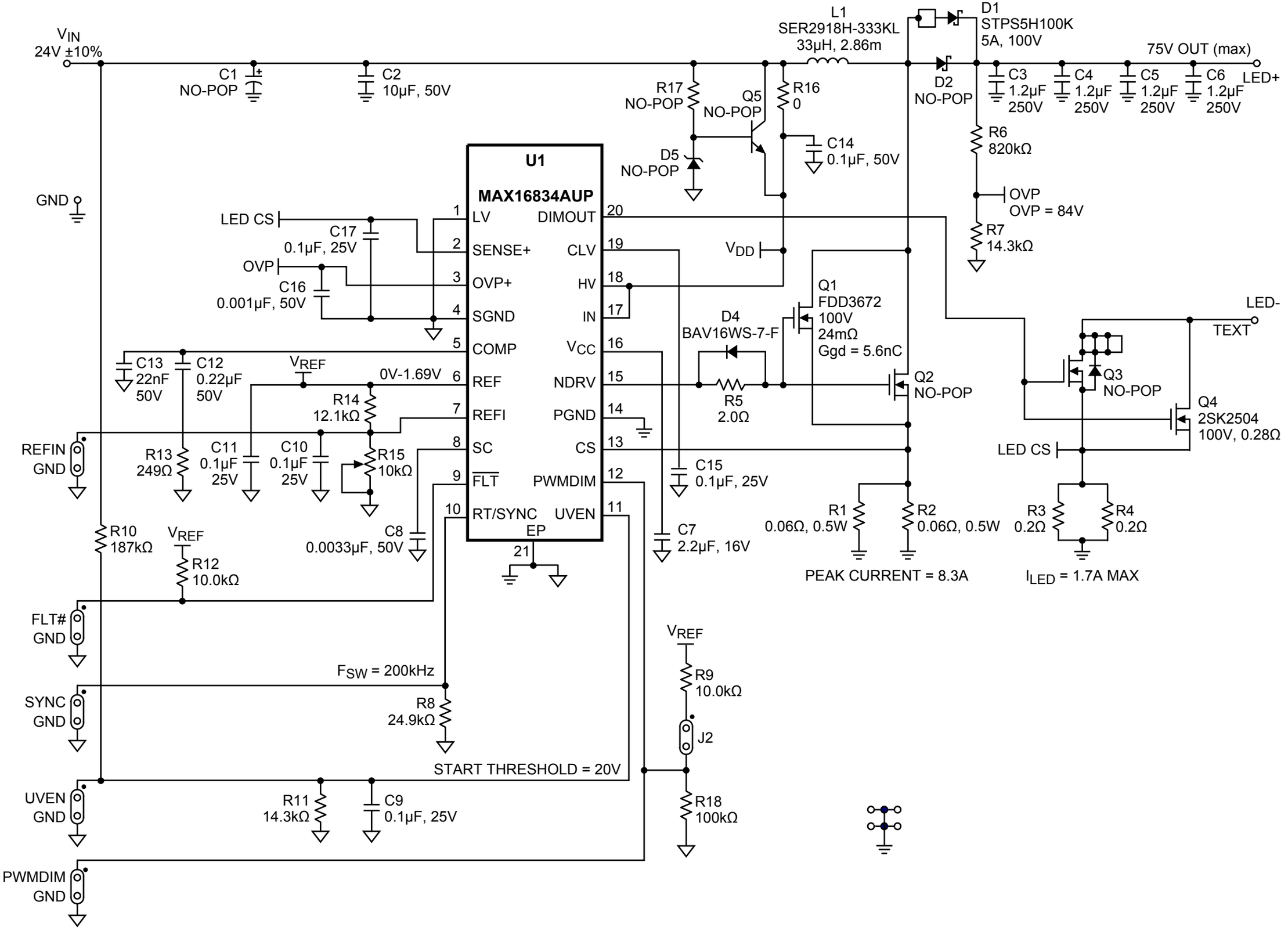
VIN
24V ±10%
C1
NO-POP
C2
10µF, 50V
L1
SER2918H-333KL
33µH, 2.86m
D1
STPS5H100K
5A, 100V
D2
NO-POP
75V OUT (max)
LED+
C3
1.2µF
250V
C4
1.2µF
250V
C5
1.2µF
250V
C6
1.2µF
250V
R17
NO-POP
Q5
NO-POP
R16
0
C14
0.1µF, 50V
D5
NO-POP
R6
820kΩ
OVP
OVP = 84V
R7
14.3kΩ
GND
U1
MAX16834AUP
LED CS
C17
0.1µF, 25V
OVP
C16
0.001µF, 50V
1 LV
2 SENSE+
3 OVP+
4 SGND
5 COMP
6 REF
7 REFI
8 SC
9 FLT
10 RT/SYNC
EP
21
20 DIMOUT
19 CLV
18 HV
17 IN
16 VCC
15 NDRV
14 PGND
13 CS
12 PWMDIM
11 UVEN
VDD
Q1
FDD3672
100V
24mΩ
Ggd = 5.6nC
D4
BAV16WS-7-F
R5
2.0Ω
Q2
NO-POP
LED-
TEXT
Q3
NO-POP
Q4
2SK2504
100V, 0.28Ω
LED CS
C13
22nF
50V
C12
0.22µF
50V
VREF
0V-1.69V
R14
12.1kΩ
REFIN
GND
R13
249Ω
C11
0.1µF
25V
C10
0.1µF
25V
R15
10kΩ
C15
0.1µF, 25V
R1
0.06Ω, 0.5W
R2
0.06Ω, 0.5W
R3
0.2Ω
R4
0.2Ω
PEAK CURRENT = 8.3A
ILED = 1.7A MAX
R10
187kΩ
VREF
R12
10.0kΩ
C8
0.0033µF, 50V
C7
2.2µF, 16V
FLT#
GND
FSW = 200kHz
SYNC
GND
R8
24.9kΩ
VREF
R9
10.0kΩ
J2
START THRESHOLD = 20V
UVEN
GND
R11
14.3kΩ
C9
0.1µF, 25V
R18
100kΩ
PWMDIM
GND